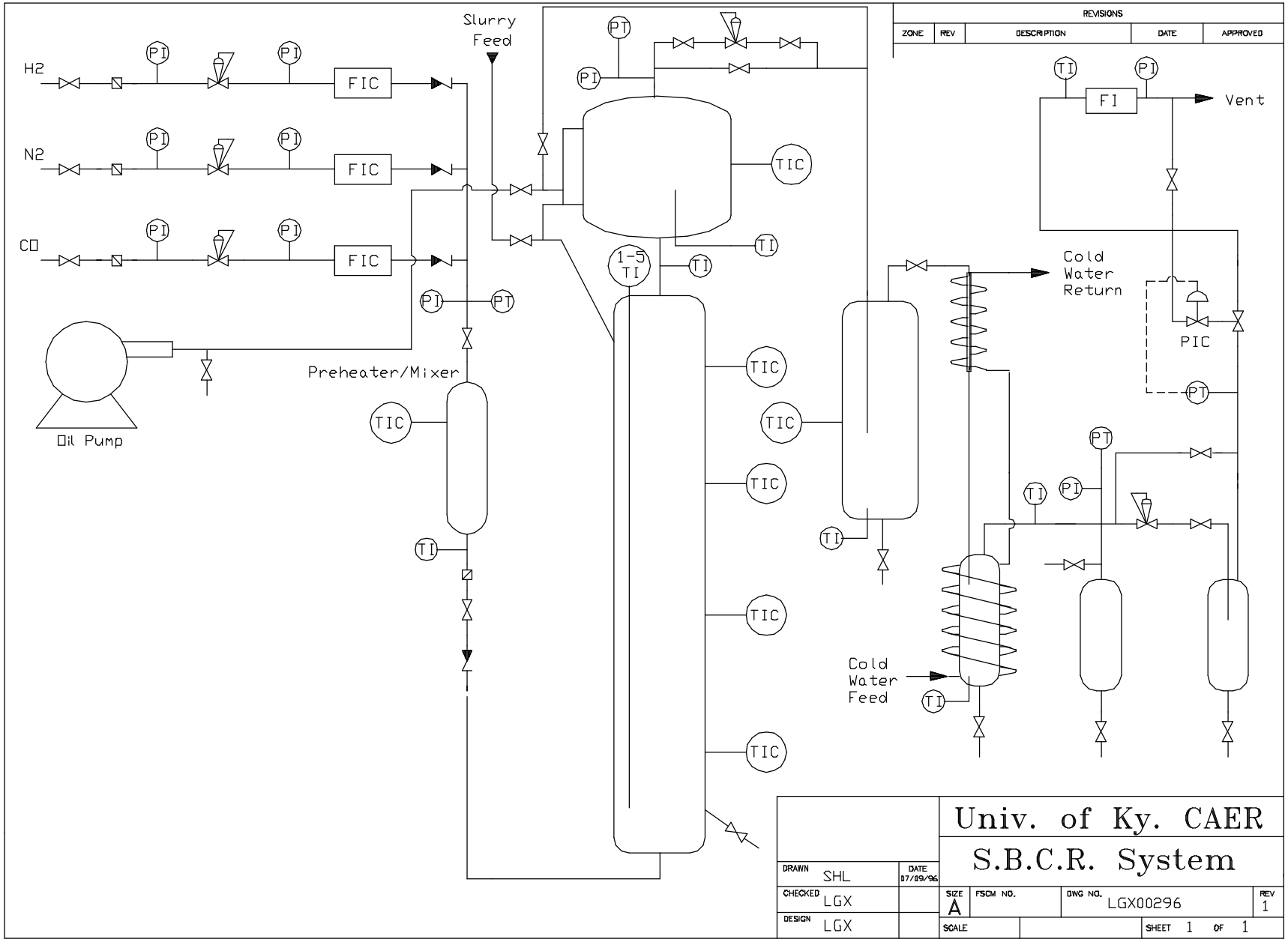
REVISIONS
ZONE
REV
DESCRIPTION
DATE
APPROVED
H2
N2
CO
PI
FIC
Slurry Feed
PT
TIC
TI
1-5 TI
Preheater/Mixer
Oil Pump
FI
Vent
Cold Water Return
PIC
Cold Water Feed
Univ. of Ky. CAER
S.B.C.R. System
DRAWN SHL
DATE 07/09/96
CHECKED LGX
DESIGN LGX
SIZE A
FSCM NO.
DWG NO. LGX00296
REV 1
SCALE
SHEET 1 OF 1